REVISION HISTORY			
REV.	DESCRIPTION	DATE	DRAWN BY
1	ORIGINAL PRINT	2/6/2025	P. YEUNG

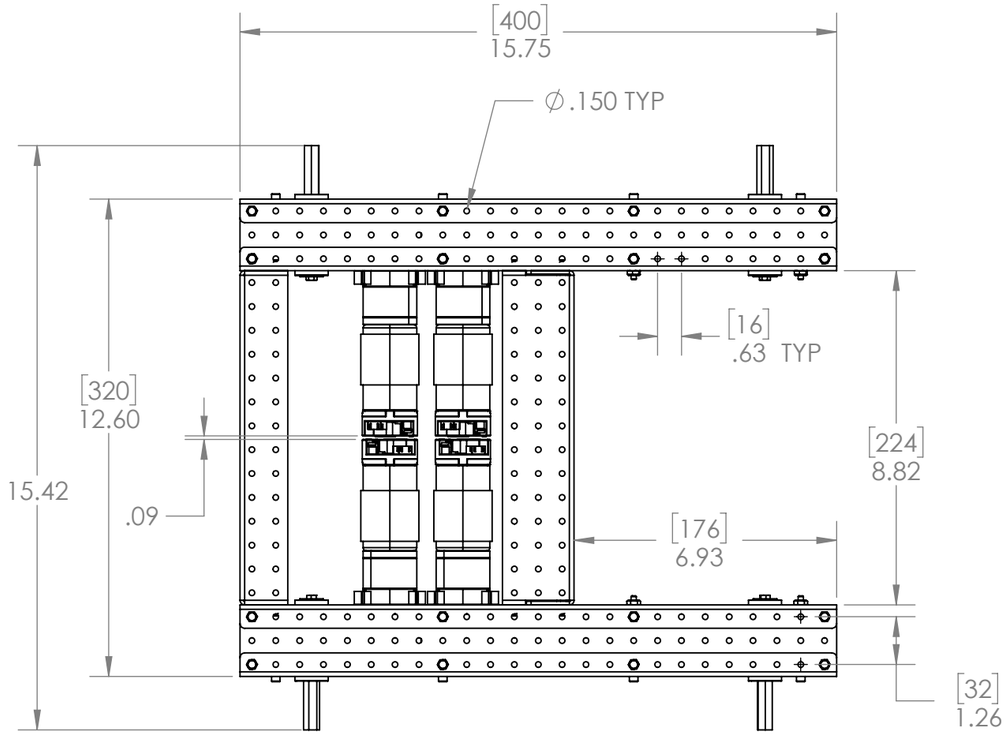

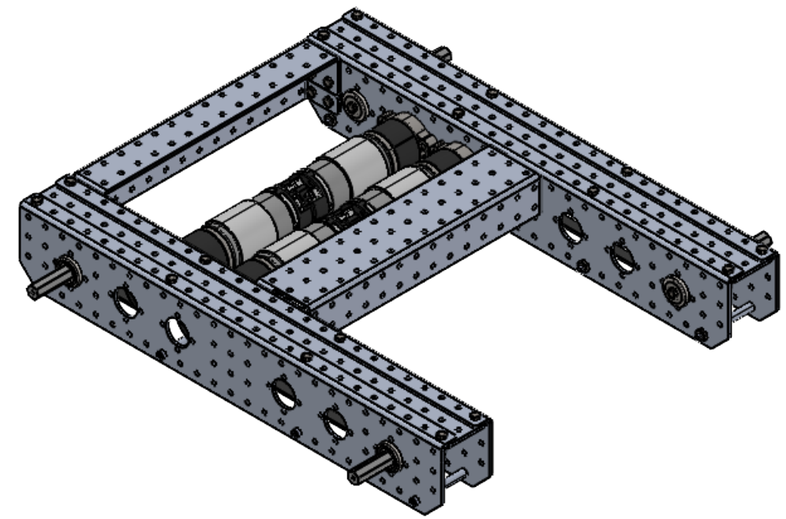

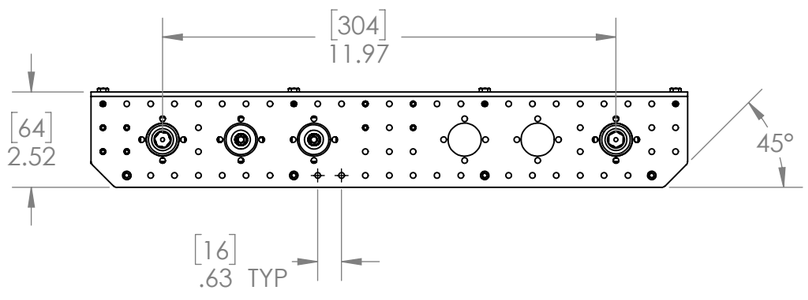

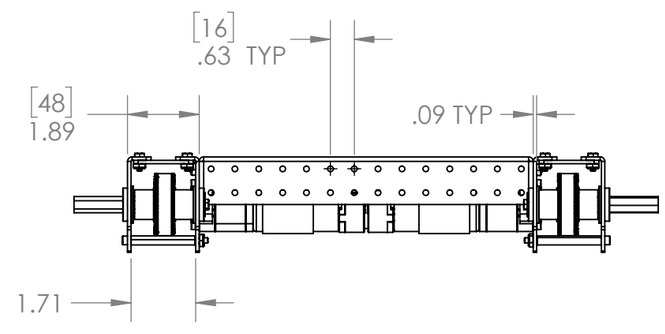

*** SEE CAD FOR ADDITIONAL TOOLPATH INFO***

UNLESS OTHERWISE SPECIFIED:	COMMENTS:
DIMENSIONS ARE IN INCHES	DUAL DIMENSIONS ARE IN MILLIMETERS.
TOLERANCES: FRACTIONAL ±1/16 ANGULAR: MACH ±1° ANGULAR: BEND ±5° ONE PLACE DECIMAL ±0.1 TWO PLACE DECIMAL ±0.01 THREE PLACE DECIMAL ±0.005 FOUR PLACE DECIMAL ±0.0005	BREAK ALL SHARP EDGES.
MATERIAL	
FINISH	
DO NOT SCALE DRAWING	

	NAME	DATE
CHECKED	NM	2/6/25
ENG APPR.		
MFG APPR.		
Q.A.		

AndyMark

TITLE:
MECANAM LAYOUT (FRAME)

SIZE	DWG. NO.	REV
B	BTHNW1N	1

SCALE: 1:4 SHEET 1 OF 1